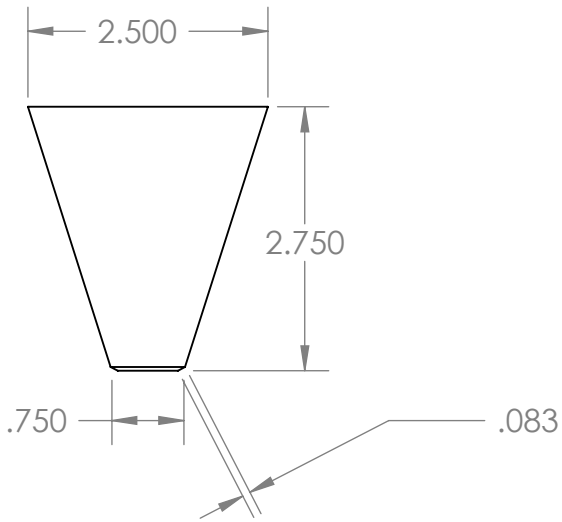

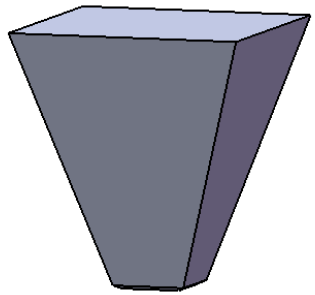

PROPRIETARY AND CONFIDENTIAL

THE INFORMATION CONTAINED IN THIS DRAWING IS THE SOLE PROPERTY OF CLASSIC DESIGNS BY MATTHEW BURAK. ANY REPRODUCTION IN PART OR AS AWHOLE WITHOUT THE WRITTEN PERMISSION OF CLASSIC DESIGNS BY MATTHEW BURAK IS PROHIBITED.

SIZE **A**

DWG. NO. 710B

5 4 3 1