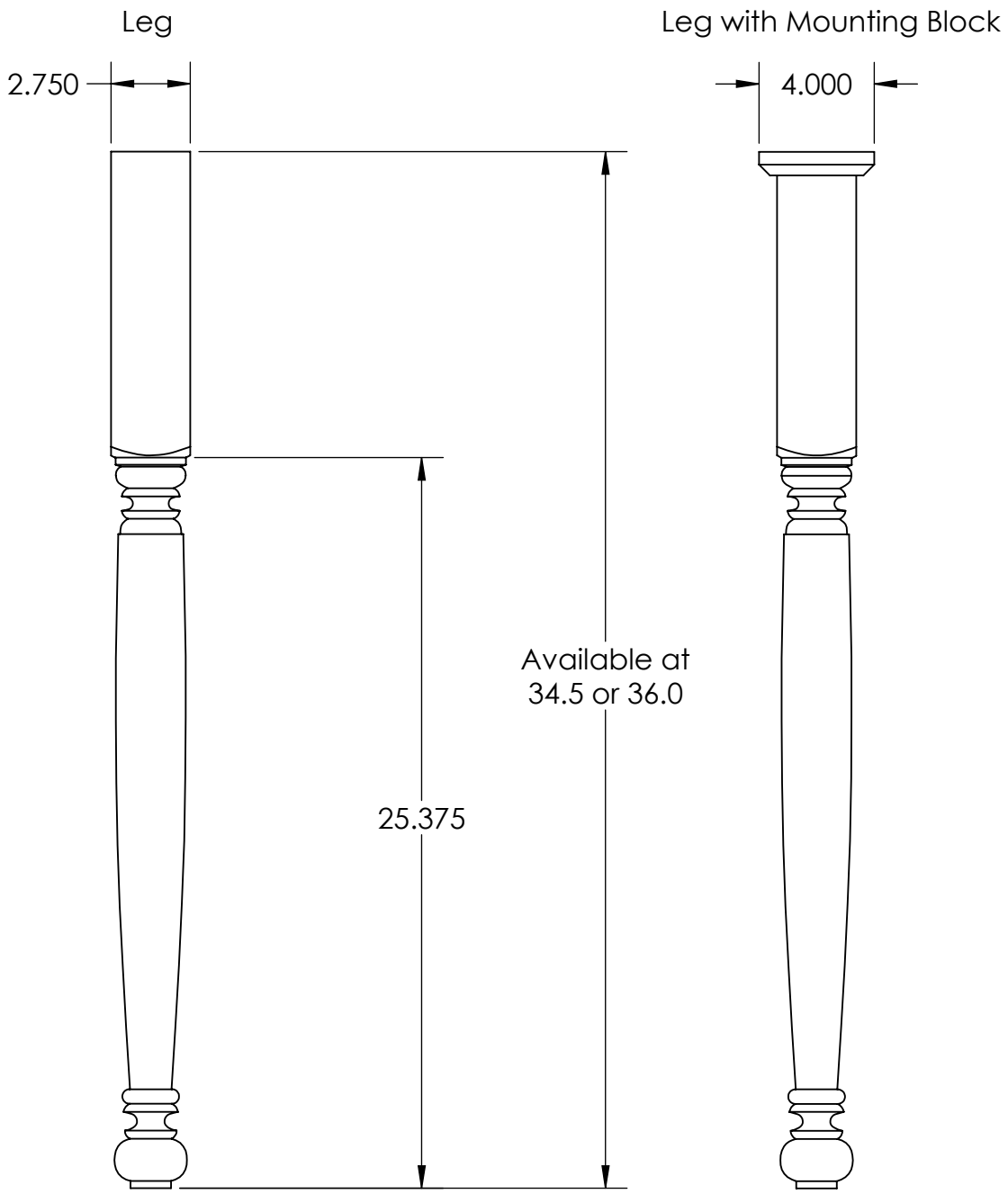

TableLegs.com

Classic Designs by Matthew Burak